Project Name:_____
Model Number:_____
Type:_____

DL-COVE — Cove Lighting System

DESCRIPTION

For outdoor or indoor use, this linear fixture can be used for coves or anywhere a discerning light is needed. It can be mounted with quick connects that are built in. These fixtures feature universal input voltage, making them a perfect choice anywhere

SPECIFICATION FEATURES

Construction: Aluminum and acrylic lens

Qualifications ETL certified, IP66 rated

Electrical: 120v / 60hz input

LED MODULE ORDERING MATRIX

DLCOVE	CCT	WATT
DLCOVE	27	7 - 1FT
	30	28- 4FT
	35	
	40	
	60	

ADDITIONAL ACCESSORIES

Ordered Separately:

DLCOVE-START - Used to start a run of fixtures from a junction box, standard length is 5 feet of cable

DLCOVE-JUMP - Used to connect one run of fixtures to another, standard length is 5 feet of cable

Phone: 646.535.4898 | Email: sales@directled.co | Web: directled.co

Project Name:_____
Model Number:_____
Type:_____

DL-COVE | Cove Lighting System

PERFORMANCE DETAILS

Materials	Aluminum and acrylic lens
Dimensions	1.18” wide x 3.1” tall
Input Voltage	120v-277v / 60hz input
Wattage	7w per foot
Lumens	44Lumen per Watt / 308L per foot
Finish	Aluminum standard

CRI	80
Mounting	Via Included Swivel Clips
Operating temperature	0 - 110 F
Color Temperature	Fixed CCT
Dimming capability	0-10V standard
Certifications	ETL, IP66
Beam Angle	150 degree

LINE DRAWINGS

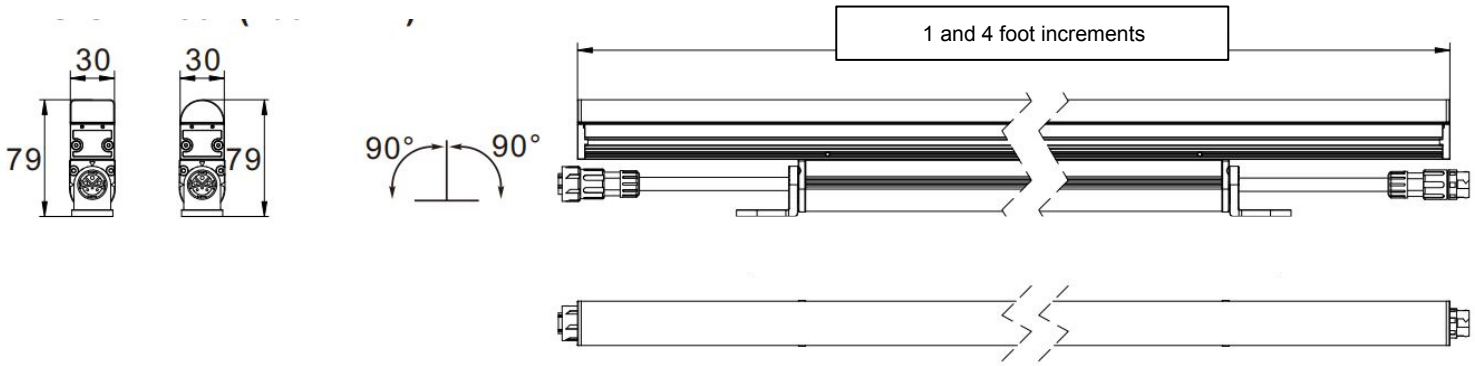

Phone: 646.535.4898 | Email: sales@directled.co | Web: directled.co

Project Name:_____
Model Number:_____
Type:_____

DL-COVE | Cove Lighting System

PHOTOMETRIC DISTRIBUTION CURVE

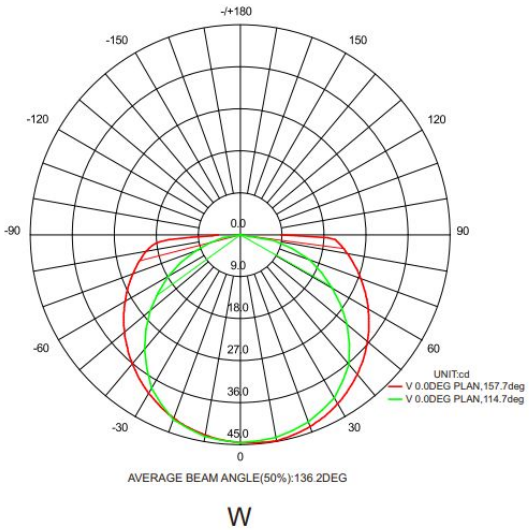

INSTALLATION DIAGRAM
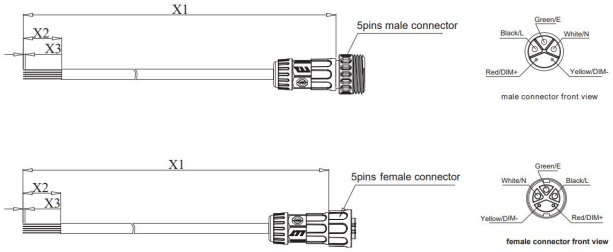
100~277VAC type: