Project Name:_____
Model Number:_____
Type:_____

DLX Series	Low Voltage Driver

DESCRIPTION

Built specifically for DirectLED tape lights these drivers will provide constant voltage for years at a time, with minimal fluctuations in output.

SPECIFICATION FEATURES

Output: Constant voltage
IP Rating: IP20
Rated Power: 30-80w
Universal input: 110-277Vac
Safety Features: Built in active PFC, typical power factor>0.95, Short-circuit, over-temperature, over-load protection

Certifications: UL cUL listed, Class 2, Class P,
Dimming: Non Dimming
High efficiency:up to 80%
Load:0.01-100%
Materials: Plastic

ORDERING MATRIX

DLX Series	DIMMING	VOLTAGE	WATTAGE
DLX	ND	24V	30 60 96 150 300

Phone: 646.535.4898 | Email: sales@directled.co | Web: directled.co

Project Name:_____
Model Number:_____
Type:_____

DLX Series | Low Voltage Driver

WIRING DIAGRAMS

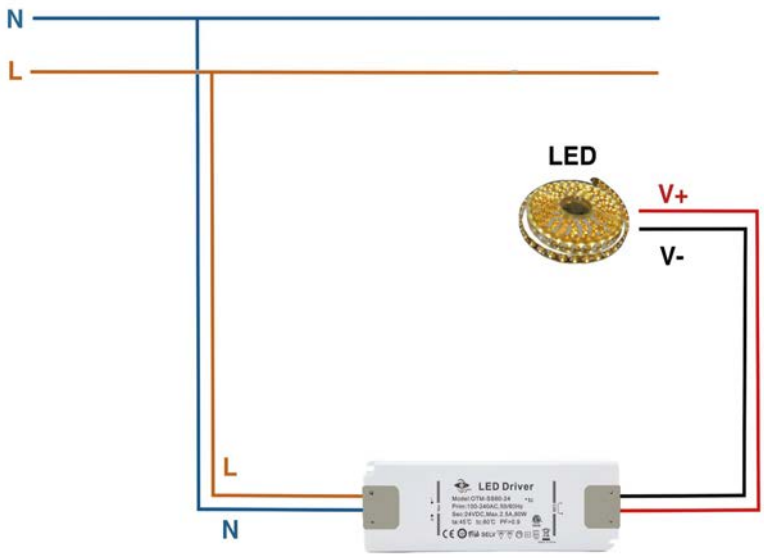

LINE DRAWINGS

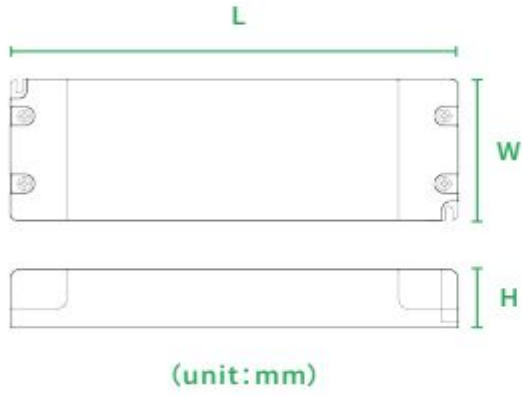

Power	Size(L*W*H)
20W	165*50*16.5
30W	165*50*16.5
40W	165*50*16.5
50W	165*50*16.5
60W	185*63.5*22
80W	185*63.5*22

Phone: 646.535.4898 | Email: sales@directled.co | Web: directled.co

Project Name:_____
Model Number:_____
Type:_____

DLX-ND Series | Low Voltage Driver

Specifications:

Protection	Hiccup mode, recover automatically after fault condition is removed
Over Current	≤1.2*| out
Over Loading	≤120%
Over temperature	100°C±10°C,Shut down o/p voltage, recover automatically after temperature goes down.
Environment	-40~+60°C
Working Humidity	20～90%RH, non-condensing
Storage TEMP. Humidity	-40～+80℃, 10～95%RH
TEMP .cofficient	±0.03%/℃(0～50℃)
Vibration	10～500Hz, 2G 12min./1 cycle,period for 72min. each along X,Y,Z axes
Safety& EMC	EN61347-1 EN61347-2-13
Withstand voltage	I/P-O/P:3KVAC IP-FG:1.88KVAC O/P-FG:0.5KVAC
Isolation resistance	I/P-O/P I/P-FG O/P-FG:100MΩ/500VDC/25℃/70%RH
EMC EMISSION	EN55022,EN55015 Class B