Project Name:_____
Model Number:_____
Type:_____

DLDP Series	Fire Rated 4” Pan Light

DESCRIPTION

This fire rated downlight is the perfect nexus between ease of installation and code compliant fire rated protection. No housing needed means it can easily be installed after the sheet rock is closed, yet the rigid steel casing with 2 hour fire rated protection ensures that code is complied with.

SPECIFICATION FEATURES

Construction: 2-Hour Fire Rated resistant steel casing

Field Adjustable: Switchable 2700K/3000K/3500K/4000K/5000K CCT

Qualifications: UL Listed

Electrical: 120-277v input

2-HOUR FIRE RATING
Tested to comply with UL 263, ASTM E119 & CAN ULC S101

ORDERING MATRIX

DLDP Series	SIZE	SHAPE	OPTIONS		
DLDP	**4** Voltage: 120ac Wattage:12.0W Lumens: 800 at 30k, for other CCT see page 2	**R**- ROUND **S**- SQUARE	**EM** **MOUNT** - MOUNTING PAN		

Phone: 646.535.4898 | Email: sales@directled.co | Web: directled.co

Project Name:_____
Model Number:_____
Type:_____

DLDP Series	Fire Rated 4” Pan Light

PERFORMANCE DETAILS

Materials	Steel
Dimensions	4 inch
Input Voltage	120-277v 60hz input
Wattage	12W
Lumens	800L
Finish	Bronze, nickel, Black , and copper available

CRI	80
Mounting	Recessed
Operating temperature	-20 to 100 F
Color Temperature	Switchable 2700K/3000K/3500K/4000K/5000k CCT
Dimming capability	ELV
Certifications	ETL
Beam Angle	120 degree

LINE DRAWINGS

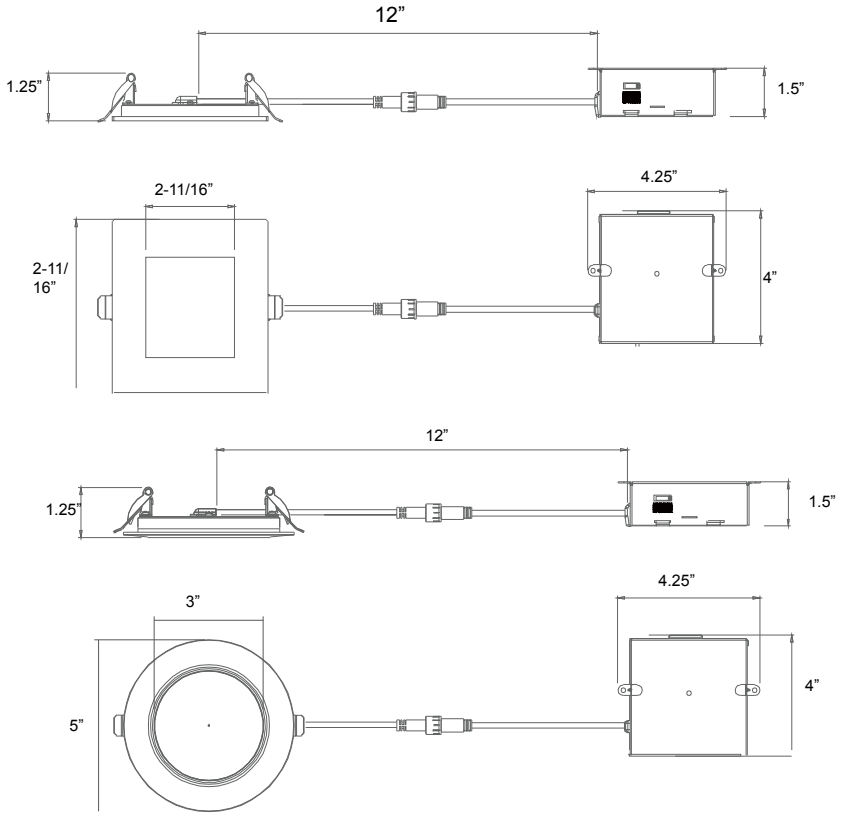

LUMEN OUTPUT DETAIL

CCT	LUMEN
27K	750
30K	800
35K	820
40K	850
50K	880

Phone: 646.535.4898 | Email: sales@directled.co | Web: directled.co