UNIVERSAL MOUNT LED 2.5" CYLINDER - 5 CCT SELECTABLE TRACK/0-10V DIMMING

DLC-3-60-UNV

IMPORTANT : READ ALL INSTRUCTIONS BEFORE INSTALLING FIXTURES .
KEEP FOR FUTURE REFERENCE .

SAFETY : FOR YOUR SAFETY , THIS FIXTURE MUST BE WIRED IN ACCORDANCE TO LOCAL ELECTRICAL CODES AND ORDINANCES . ALL WORK SHOULD BE DONE BY A QUALIFIED ELECTRICIAN .

WARNING : MAKE SURE POWER IS OFF FROM THE ELECTRICAL PANEL BEFORE STARTING INSTALLATION OR ATTEMPTING ANY MAINTENANCE . INDOOR INSTALLATION ONLY .

TOOLS REQUIRED : SAW , MEASURING TAPE , ELECTRICAL WIRING (USE TAPE AND GAUGE SUITABLE FOR APPLICATION TO CONNECT THE FIXTURES .

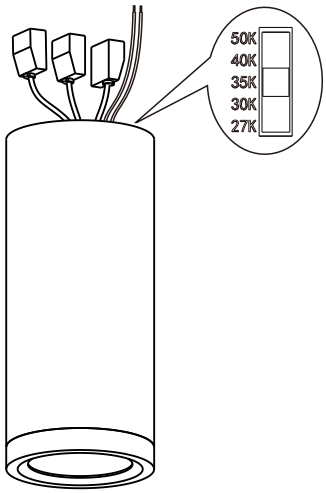

INSTRUCTIONS

1. MAKE SURE POWER IS OFF BEFORE STARTING INSTALLATION .
2. SELECT THE DESIRED LED COLOR TEMPERATURE USING THE SWITCH INSIDE THE CYLINDER .
3. CONNECT THE QUICK CONNECTORS BETWEEN CYLINDER MODULE AND DESIRED MOUNTING KIT WIRES .
4. ASSEMBLE THE LUMINAIRE AND DESIRED MOUNTING KIT BY SCREWING THE TWO PARTS TOGETHER .
5. MAKE ELECTRICAL CONNECTIONS BETWEEN THE LUMINAIRE AND THE JUNCTION BOX .

ACCESSORIES

DLC-3-W1

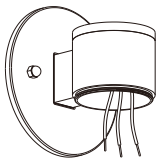

DLC-3-W2

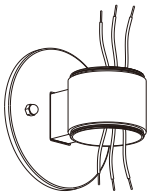

DLC-3-FM

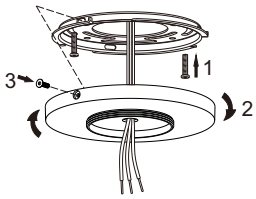

DLC-3-RP

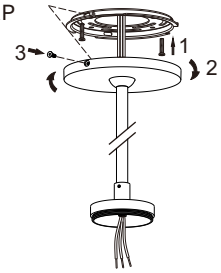

REPLACING REFLECTOR INSTRUCTIONS

1. UNSCREW THE FRONT RING .
2. UNSCREW THE REFLECTIVE COLLAR.
3. REMOVE THE BEAM ,REPLACE THE NECESSARY BEEM.
4. SCREW THE REFLECTIVE COLLAR IN
5. SCREW THE RING IN
6. THE INSTALLATION IS COMPLETE

DLC-3-BEAM-15
DLC-3-BEAM-36
DLC-3-BEAM-60

1

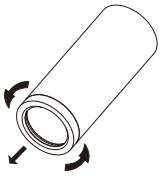

2

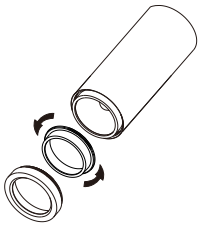

3

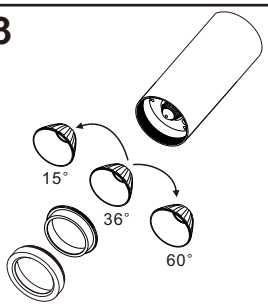

4

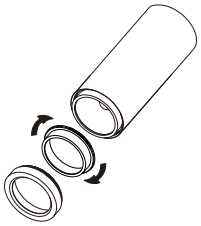

5

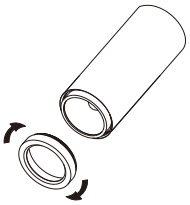

6

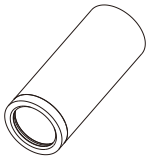

UNIVERSAL MOUNT LED 2.5" CYLINDER

DLC-3-RP（SURFACE MOUNT）

IMPORTANT : READ ALL INSTRUCTIONS BEFORE INSTALLING FIXTURES .
KEEP FOR FUTURE REFERENCE .

SAFETY : FOR YOUR SAFETY , THIS FIXTURE MUST BE WIRED IN ACCORDANCE TO LOCAL ELECTRICAL CODES AND ORDINANCES . ALL WORK SHOULD BE DONE BY A QUALIFIED ELECTRICIAN .

WARNING : MAKE SURE POWER IS OFF FROM THE ELECTRICAL PANEL BEFORE STARTING INSTALLATION OR ATTEMPTING ANY MAINTENANCE . INDOOR INSTALLATION ONLY .

TOOLS REQUIRED : SAW , MEASURING TAPE , ELECTRICAL WIRING (USE TAPE AND GAUGE SUITABLE FOR APPLICATION TO CONNECT THE FIXTURES) .

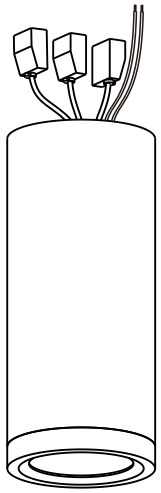

INSTRUCTIONS

1. PRIOR TO INSTALLATION , INSTALL MOUNTING PLATE (INCLUDED) INTO THE ELECTRICAL BOX WITH MOUNTING SCREWS (INCLUDED). DRIVE SCREWS COMPETELY TO THE END OF THE JUNCTION BOX.
2. SELECT THE DESIRED LED COLOR TEMPERATURE USING THE SWITCH INSIDE THE CYLINDER .NEXT PASS THE QUICK-CONNECT PLUG WIRE THROUGH THE CENTER HOLE OF THE COVER PLATE
3. ROTATE THE CYLINDER BODY TO THE RIGHT UNTIL IT IS LOCKED.
4. CONNECT THE QUICK CONNECTORS BETWEEN CYLINDER MODULE AND DESIRED MOUNTING KIT WIRES . CONNECT WHITE TO WHITE , BLACK TO BLACK , AND COPPER WIRE TO GREEN WIRE.
5. PUT THE COVER PLATE TO THE MOUNTING PLATE , ASSEMBLY INTO THE BRACKET SLOT ,ROTATE TO THE RIGHT ,DRIVE SCREWS TO LOCK.
6. TO PREVENT MOISTURE FROM ENTERING THE OUTLET BOX AND CAUSING A SHOT,USE CLEAR CAULKING(I.E.INDOOR/OUTDOOR SILICONE SEALANT) TO OUTLINE THE OUTSIDE OF THE COVER PLATE WHRER IT MEETS THE CEILING.

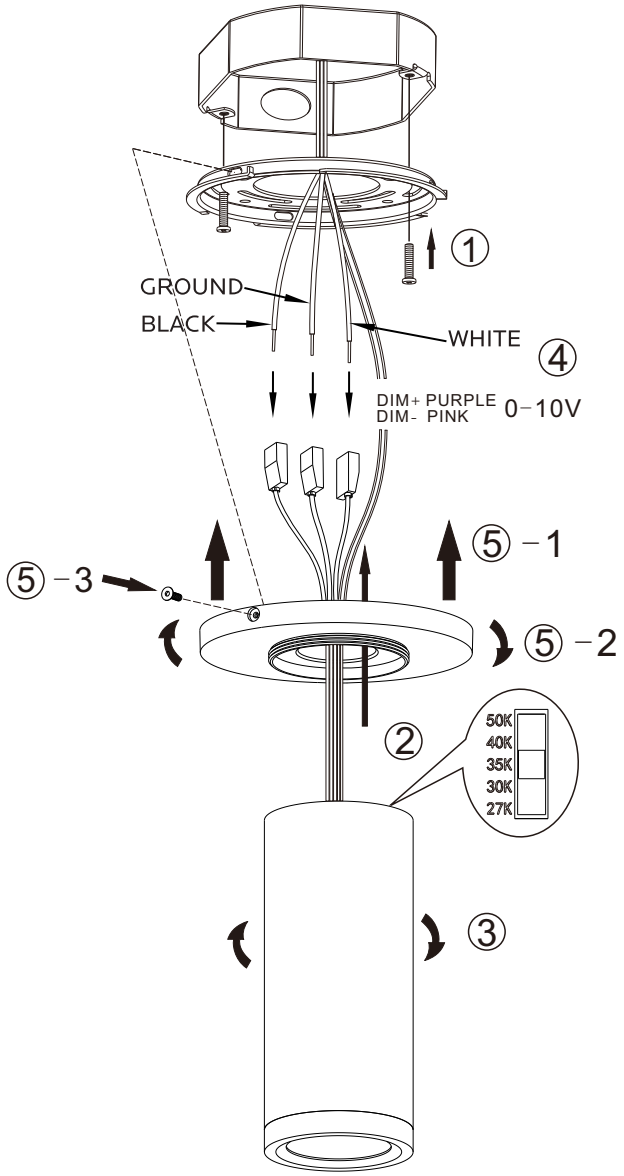

⑥ SEALING

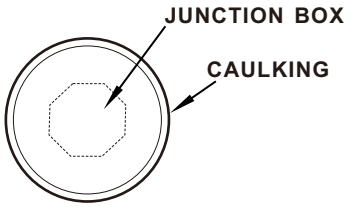

Phone:646.535.4898 | Email: sales@directled.co | Web: directled.co

UNIVERSAL MOUNT LED 2.5″ CYLINDER

DLC-3-RP（SURFACE MOUNT）

IMPORTANT : READ ALL INSTRUCTIONS BEFORE INSTALLING FIXTURES . KEEP FOR FUTURE REFERENCE .

SAFETY : FOR YOUR SAFETY , THIS FIXTURE MUST BE WIRED IN ACCORDANCE TO LOCAL ELECTRICAL CODES AND ORDINANCES . ALL WORK SHOULD BE DONE BY A QUALIFIED ELECTRICIAN .

WARNING : MAKE SURE POWER IS OFF FROM THE ELECTRICAL PANEL BEFORE STARTING INSTALLATION OR ATTEMPTING ANY MAINTENANCE . INDOOR INSTALLATION ONLY .

TOOLS REQUIRED : SAW , MEASURING TAPE , ELECTRICAL WIRING (USE TAPE AND GAUGE SUITABLE FOR APPLICATION TO CONNECT THE FIXTURES) .

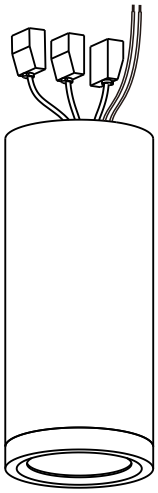

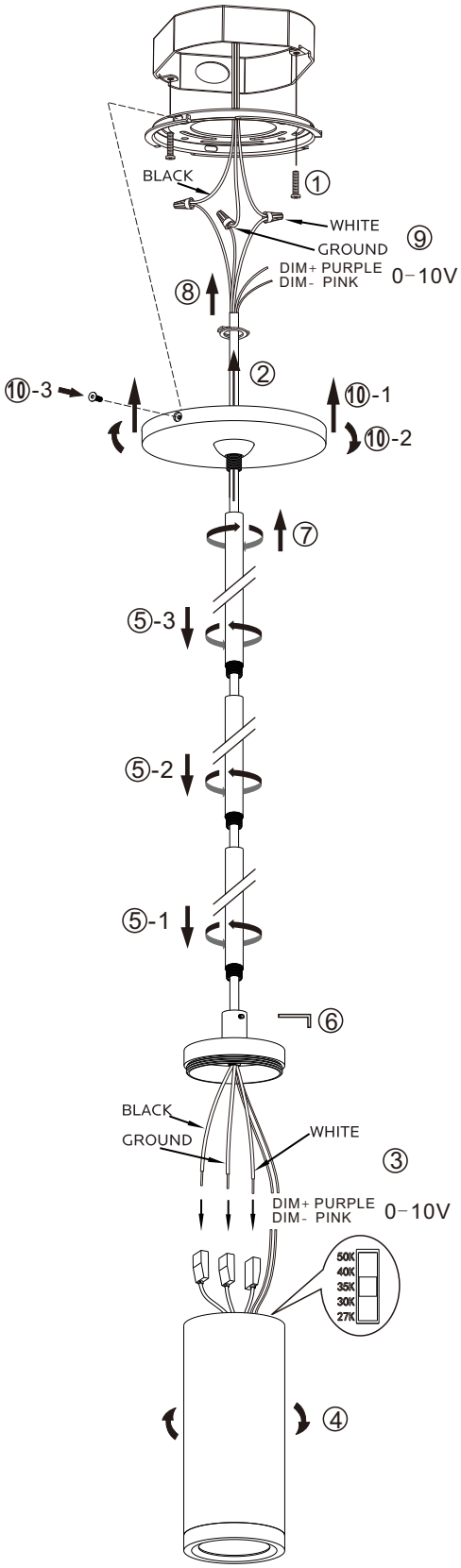

INSTRUCTIONS

1. PRIOR TO INSTALLATION , INSTALL MOUNTING PLATE(INCLUDED) INTO THE ELECTRICAL BOX .WITH MOUNTING SCREWS (INCLUDED). DRIVE SCREWS COMPETELY TO THE END OF THE JUNCTION BOX.
2. THE LENGTH OF THE STRAIGHT PIPE IS BASED ON THE NEEDS OF USE, AND THE WIRE IS INSERTDE INTO THE STRAIGHT TUBE ,THEN SUCTION INTO THE COVER PLATE BEFORE INSTALLATION.
3. CONNECT THE QUICK CONNECTORS BETWEEN CYLINDER MODULE AND DESIRED MOUNTING KIT WIRES .SELECT THE DESIRED LED COLOR TEMPERATURE USING THE SWITCH INSIDE THE CYLINDER .
4. INSERT THE CYLINDER BODY INTO THE TAIL HOOD,THEN ROTATE IT TO THE RIGHT UNTIL IT IS LOCKED.
5. ROTATED THE STRAIGT PIPE TO THE LEFT IN TURN TO TIGHTEN.
6. THE SCREW MUST BE TIGHTENED WITH THE PLATE HANDLE.
7. ROTATED THE COMBINATION PIPE TO THE RIGHT IN TURN TO TIGHTEN ONTO THE BALL.
8. THE POWER CORD MUST BE STRAIGHTENED AND CLAMPED.
9. CONNECT SUPPLY WIRES TO WIRES ON FIXTURE WITH WIRE NUTS (INCLUDED). CONNECT WHITE TO WHITE , BLACK TO BLACK , AND COPPER WIRE TO GREEN WIRE .
10. PUT THE COVER PLATE TO THE MOUNTING PLATE ,ASSEMBLY INTO THE BRACKET SLOT ,ROTATE TO THE RIGHT ,DRIVE SCREWS TO LOCK.

Phone:646.535.4898 | Email: sales@directled.co | Web: directled.co

UNIVERSAL MOUNT LED 2.5" CYLINDER

DLC-3-W1（WALL MOUNT）

IMPORTANT : READ ALL INSTRUCTIONS BEFORE INSTALLING FIXTURES .
KEEP FOR FUTURE REFERENCE .

SAFETY : FOR YOUR SAFETY , THIS FIXTURE MUST BE WIRED IN ACCORDANCE TO LOCAL ELECTRICAL CODES AND ORDINANCES . ALL WORK SHOULD BE DONE BY A QUALIFIED ELECTRICIAN .

WARNING : MAKE SURE POWER IS OFF FROM THE ELECTRICAL PANEL BEFORE STARTING INSTALLATION OR ATTEMPTING ANY MAINTENANCE . INDOOR INSTALLATION ONLY .

TOOLS REQUIRED : SAW , MEASURING TAPE , ELECTRICAL WIRING (USE TAPE AND GAUGE SUITABLE FOR APPLICATION TO CONNECT THE FIXTURES) .

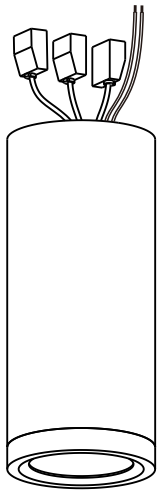

INSTRUCTIONS

1. PRIOR TO INSTALLATION , INSTALL MOUNTING PLATE (INCLUDED) INTO THE ELECTRICAL BOX WITH MOUNTING SCREWS (INCLUDED). DRIVE SCREWS COMPETELY TO THE END OF THE JUNCTION BOX.
2. CONNECT SUPPLY WIRES TO WIRES ON FIXTURE WITH WIRE NUTS (INCLUDED). CONNECT WHITE TO WHITE , BLACK TO BLACK , AND COPPER WIRE TO GREEN WIRE .
3. PUT THE COVER PLATE TO THE MOUNTING PLATE ,DRIVE THE ROUND HEAD CAP NUT TO LOCK.
4. CONNECT THE QUICK CONNECTORS BETWEEN CYLINDER MODULE AND DESIRED MOUNTING KIT WIRES . SELECT THE DESIRED LED COLOR TEMPERATURE USING THE SWITCH INSIDE THE CYLINDER .
5. ROTATE THE CYLINDER BODY TO THE RIGHT UNTIL IT IS LOCKED.
6. TO PREVENT MOISTURE FROM ENTERING THE OUTLET BOX AND CAUSING A SHOT,USE CLEAR CAULKING(I.E.INDOOR/OUTDOOR SILICONE SEALANT) TO OUTLINE THE OUTSIDE OF THE COVER PLATE WHRER IT MEETS THE WALL.

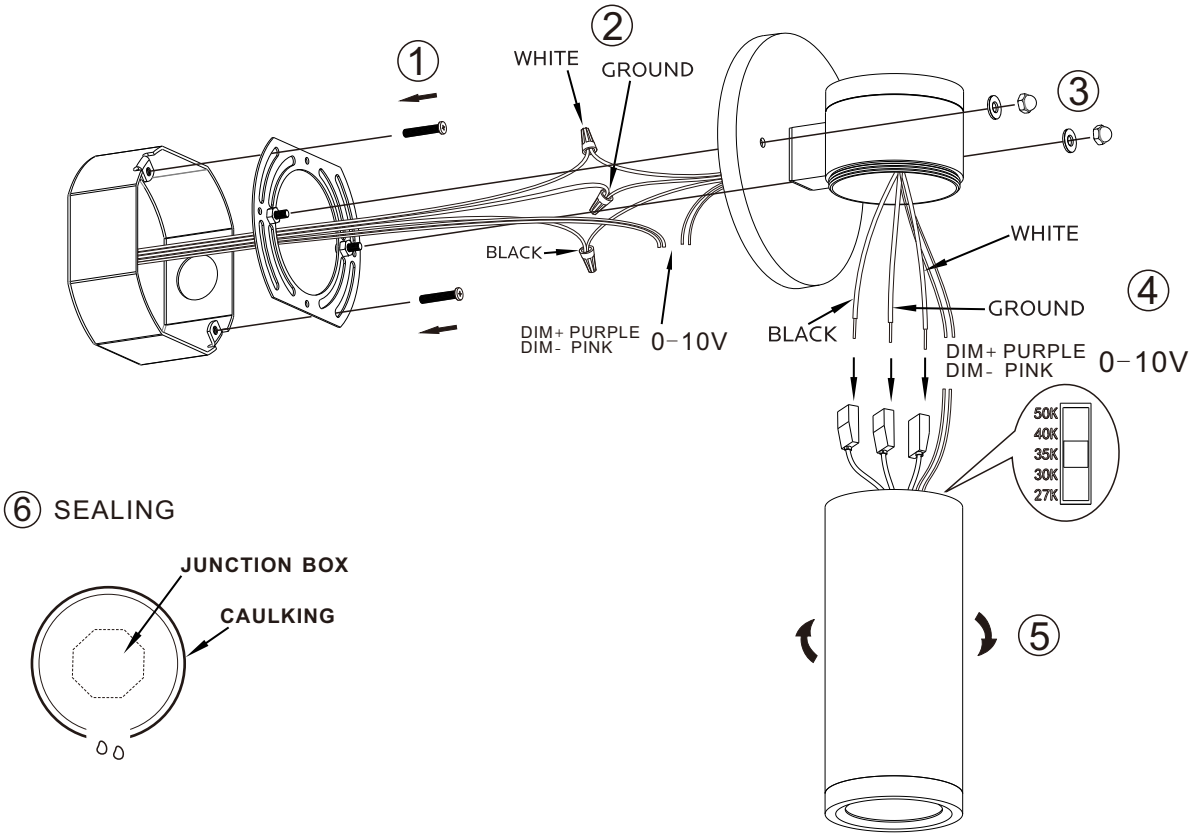

Phone:646.535.4898 | Email: sales@directled.co | Web: directled.co

UNIVERSAL MOUNT LED 2.5″ CYLINDER

DLC-3-W2（WALL MOUNT）

IMPORTANT : READ ALL INSTRUCTIONS BEFORE INSTALLING FIXTURES .
KEEP FOR FUTURE REFERENCE .

SAFETY : FOR YOUR SAFETY , THIS FIXTURE MUST BE WIRED IN ACCORDANCE TO LOCAL ELECTRICAL CODES AND ORDINANCES . ALL WORK SHOULD BE DONE BY A QUALIFIED ELECTRICIAN .

WARNING : MAKE SURE POWER IS OFF FROM THE ELECTRICAL PANEL BEFORE STARTING INSTALLATION OR ATTEMPTING ANY MAINTENANCE . INDOOR INSTALLATION ONLY .

TOOLS REQUIRED : SAW , MEASURING TAPE , ELECTRICAL WIRING (USE TAPE AND GAUGE SUITABLE FOR APPLICATION TO CONNECT THE FIXTURES) .

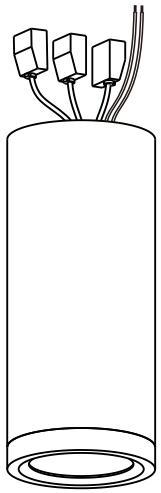

INSTRUCTIONS

1. PRIOR TO INSTALLATION , INSTALL MOUNTING PLATE (INCLUDED) INTO THE ELECTRICAL BOX WITH MOUNTING SCREWS (INCLUDED). DRIVE SCREWS COMPETELY TO THE END OF THE JUNCTION BOX.
2. CONNECT SUPPLY WIRES TO WIRES ON FIXTURE WITH WIRE NUTS (INCLUDED). CONNECT WHITE TO WHITE , BLACK TO BLACK , AND COPPER WIRE TO GREEN WIRE .
3. PUT THE COVER PLATE TO THE MOUNTING PLATE , DRIVE THE ROUND HEAD CAP NUT TO LOCK.
4. CONNECT THE QUICK CONNECTORS BETWEEN CYLINDER MODULE AND DESIRED MOUNTING KIT WIRES .SELECT THE DESIRED LED COLOR TEMPERATURE USING THE SWITCH INSIDE THE CYLINDER .
5. ROTATE THE CYLINDER BODY TO THE RIGHT UNTIL IT IS LOCKED.
6. TO PREVENT MOISTURE FROM ENTERING THE OUTLET BOX AND CAUSING A SHOT,USE CLEAR CAULKING(I.E.INDOOR/OUTDOOR SILICONE SEALANT) TO OUTLINE THE OUTSIDE OF THE COVER PLATE WHRER IT MEETS THE WALL.

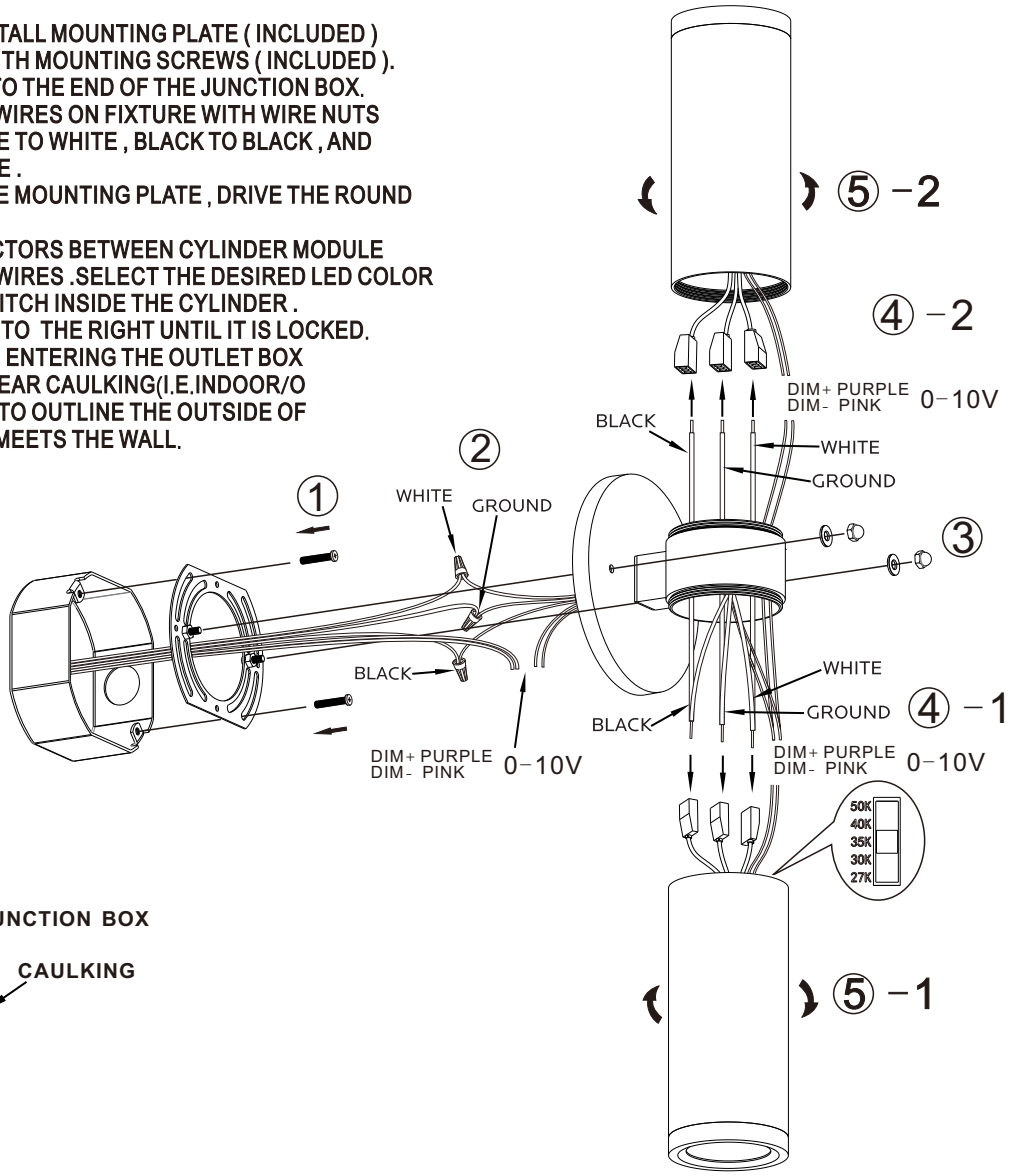

⑥ SEALING

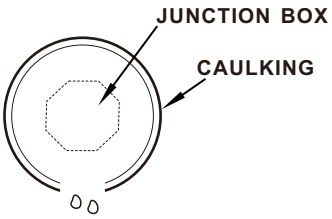

Phone:646.535.4898 | Email: sales@directled.co | Web: directled.co

UNIVERSAL MOUNT LED 2.5″ CYLINDER

DLC-3-BEAM15,DLC-3-BEAM36,DLC-3-BEAM60(CHANG THE BEAM)

IMPORTANT : READ ALL INSTRUCTIONS BEFORE INSTALLING FIXTURES .
KEEP FOR FUTURE REFERENCE .

SAFETY : FOR YOUR SAFETY , THIS FIXTURE MUST BE WIRED IN ACCORDANCE TO LOCAL ELECTRICAL CODES AND ORDINANCES . ALL WORK SHOULD BE DONE BY A QUALIFIED ELECTRICIAN .

WARNING : MAKE SURE POWER IS OFF FROM THE ELECTRICAL PANEL BEFORE STARTING INSTALLATION OR ATTEMPTING ANY MAINTENANCE . INDOOR INSTALLATION ONLY .

TOOLS REQUIRED : SAW , MEASURING TAPE , ELECTRICAL WIRING (USE TAPE AND GAUGE SUITABLE FOR APPLICATION TO CONNECT THE FIXTURES) .

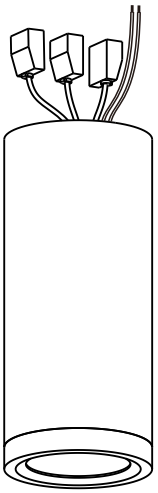

CHANG THE BEAM INSTRUCTIONS

1.UNSCREW THE FRONT RING .
2.UNSCREW THE REFLECTIVE COLLAR .
3.REMOVE THE BEAM ,REPLACE THE NECESSARY BEEM.
4.SCREW THE REFLECTIVE COLLAR IN
5.SCREW THE RING IN
6.THE INSTALLATION IS COMPLETE

DLC-3-BEAM-15
DLC-3-BEAM-36
DLC-3-BEAM-60

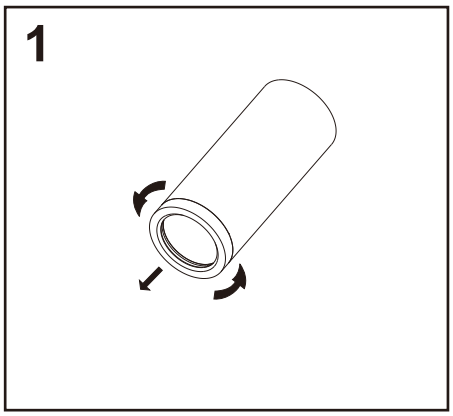

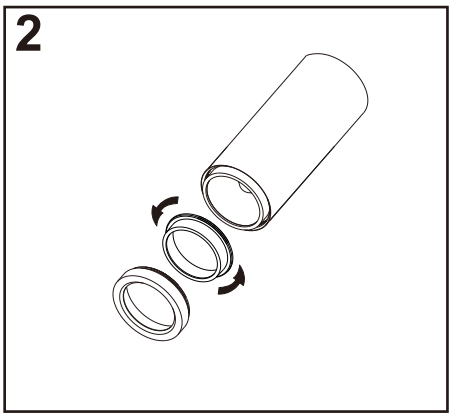

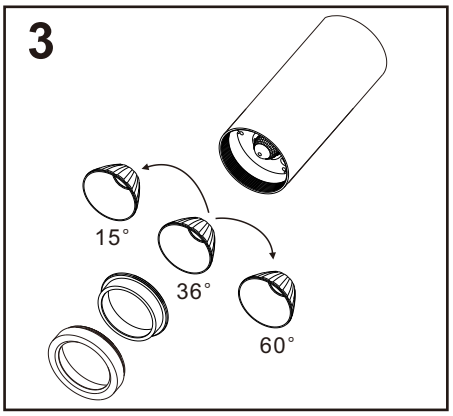

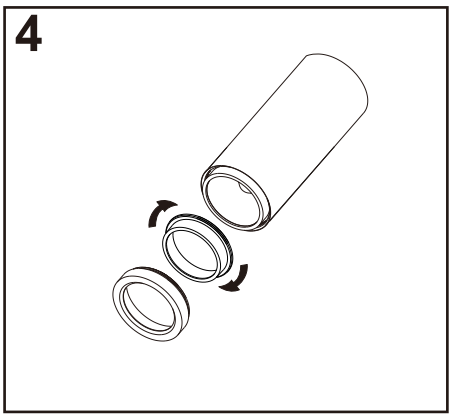

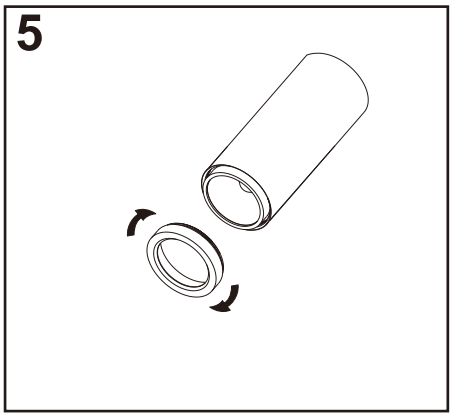

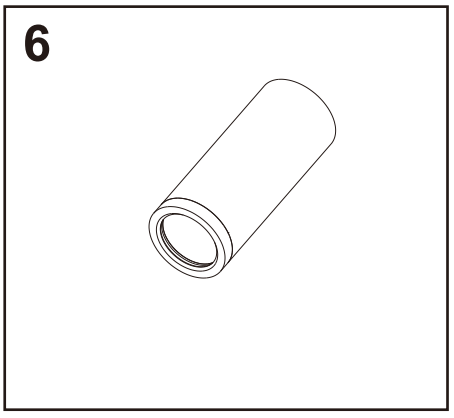

Phone:646.535.4898 | Email: sales@directled.co | Web: directled.co